Elass 9-11-2016

Fire resistance behaviors of composite structure

Finspång, Paolo Vanzo - Promat, 9th November 2016

etex industry

FRP and Passive Fire Protection

SEA Europe
Ships & Maritime Equipment Association

IMO INTERNATIONAL MARITIME ORGANIZATION

E

SUB-COMMITTEE ON SHIP DESIGN AND CONSTRUCTION
2nd session
Agenda items 12, 13, 14, 15 and 24

SDC 2/WP.5
19 February 2015
Original: ENGLISH

DISCLAIMER
As at its date of issue, this document, in whole or in part, is subject to consideration by the IMO organ to which it has been submitted. Accordingly, its contents are subject to approval and amendment of a substantive and drafting nature, which may be agreed after that date.

GUIDELINES FOR USE OF FIBRE REINFORCED PLASTIC (FRP) WITHIN SHIP STRUCTURES

etex
inspiring ways of living

Introduction to MGN 407 - March 2013

EU Directive 98/18/EC on standards for passenger ships on domestic voyages, recast as 2009/45/EC, highlighted a problem that the Directive is applicable only to ships constructed of steel or equivalent materials (ex. Aluminium).

MCA has undertaken research, in PROMAT Laboratory, to develop procedures that can be followed to demonstrate the fire protection standards for non-steel constructions.

etex industry

Monolithic Glass Reinforced Plastic (GRP) Constructions

The tests indicated that the thickest monolithic GRP construction was the most onerous case.

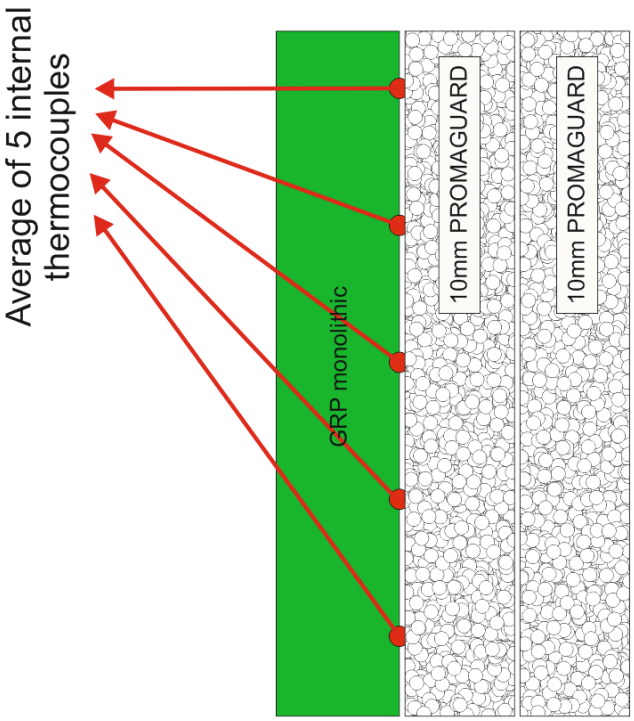

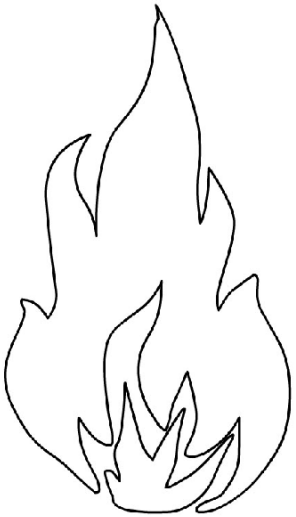

The criteria for a fire test on monolithic GRP construction is that the temperature on both fireside and non-fire-side remains below the HDT.

HDT = Heat Deflection Temperature (ISO 75).

Core Glass Reinforced Plastic (GRP) Constructions

There are three variables which need to be considered when testing cored GRP constructions:

Skin thickness.

Tests indicated that the construction with the thinnest skin was the most onerous case.

Core thickness.

Tests indicated that the construction with the thickest core was the most onerous case.

Core density.

The tests indicated that the construction with the least dense core was the most onerous case.

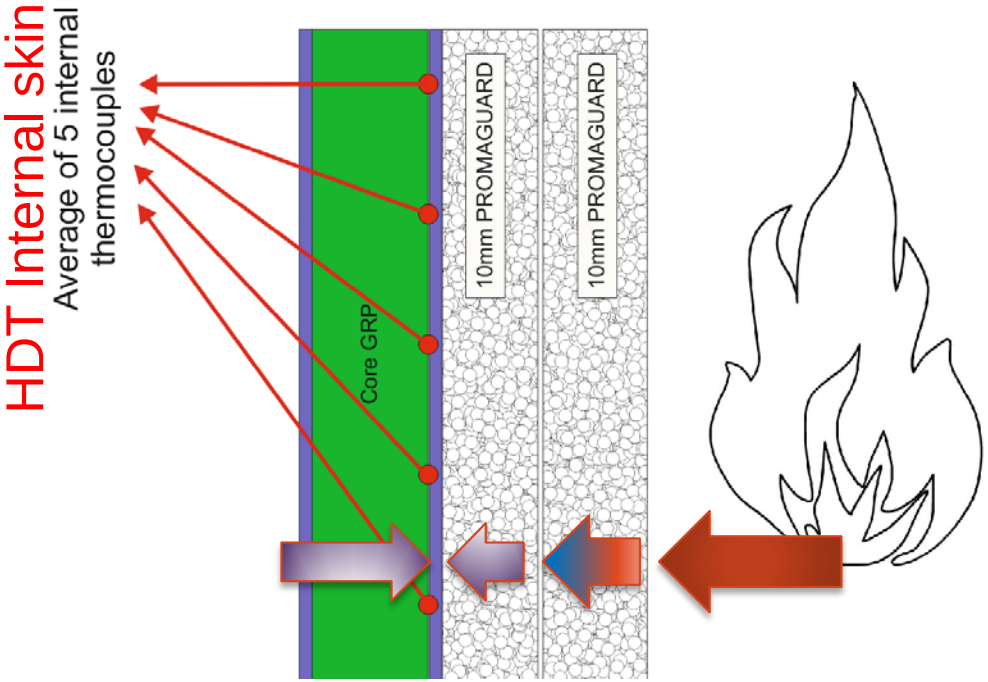

Marine GUIDANCE NOTE 407 (MCA)

Procedure for the Testing of Fire Protection for use with Composite and Wooden Constructions

MGN 407 represents a first step to have a general approach to GRP construction but it is not sufficient due to infinite possible combinations of thickness, density, HDT of skin and PVC Core.

Actual limit of MGN 407 is that only one parameter among internal skin thickness, core density and thickness (with equal or better HDT) can be better than one that what was tested.

Promat launched an internal project to defined the worst testing conditions comprising all three parameters of the MGN 407 to define a fire insulation that could cover most used GRP parameters on the market.

List of Promat Certificates (25 Type Approved) on GRP Structures

number	Database name	1st layer (fire side)	Thickness of 1st layer	2nd layer	Thickness of 2nd layer	3rd layer	Thickness of 3rd layer	4th layer	Thickness of 4th layer	HDT [°C]
1	GL-A-BU-1	PROMAGUARD®	10	PROMAGLAF® WB	20	PROMAGUARD®	10			78
2	GL-B-BU-1	PROMAGUARD®	10	PROMAGLAF® WB	15					94
3	GL-B-BU-2	PROMAGUARD®	10	PROMAGUARD®	10					65
4	GS-A-BU-1	PROMAGUARD®	10	PROMAGLAF® WB	20	PROMAGUARD®	10	PROMAGLAF® WB	20	53
5	GS-A-BU-2	PROMAGUARD® ALU	15	PROMAGUARD® ALU	15					75
6	GS-A-BU-3	PROMAGUARD® ALU	10	PROMAGUARD®	10	PROMAGLAF® WB ALU	40			72
7	GS-A-BU-4	PROMAGUARD®	10	PROMAGLAF® WB	20	PROMAGUARD®	10	PROMAGLAF® WB	20	45
8	GS-A-BU-5	PROMAGUARD®	10	PROMAGLAF® WB	20	PROMAGUARD®	10	PROMAGLAF® WB	20	55
9	GS-A-BU-6	PROMAGUARD®	10	PROMAGLAF® WB	20	PROMAGUARD®	10	PROMAGLAF® WB	20	55
10	GS-A-DE-1	PROMAGUARD® ALU	15	PROMAGUARD® ALU	15					89
11	GS-A-DE-2	PROMAGUARD®	10	PROMAGLAF® WB	20	PROMAGUARD®	10	PROMAGLAF® WB	20	51
12	GS-B-BU-1	PROMAGUARD®	10	PROMAGUARD®	10					87
13	GS-B-BU-2	PROMAGUARD® ALU	10	PROMAGLAF® WB	40					68
14	GS-B-BU-3	PROMAGUARD®	10	PROMAGLAF® WB	15	PROMAGUARD®	10			60
15	GS-B-DE-1	PROMAGUARD®	10	PROMAGLAF® WB	15	PROMAGUARD®	10			59
16	GS-A-BU-7	PROMAGUARD® ALU	10	PROMAGLAF® GM	25	PROMAGLAF® GM	25			83
17	GS-A-BU-8	PROMAGUARD® ALU	10	PROMAGLAF® GM	25	PROMAGLAF® GM	25			56
18	GS-A-DE-3	PROMAGUARD® ALU	10	PROMAGLAF® GM	25	PROMAGLAF® GM	25			73
19	GL-A-BU-2	PROMAGLAF® WB Alu	20	PROMAGUARD® ALU	10	PROMAGLAF® WB Alu	20	PROMAGUARD® ALU	10	86
20	GS-A-BU-9	PROMAGLAF® WB Alu	20	PROMAGUARD® ALU	10	PROMAGLAF® WB Alu	20	PROMAGUARD® ALU	10	86
21	GS-A-BU-10	PROMAGLAF® WB Alu	20	PROMAGUARD® ALU	10	PROMAGLAF® WB Alu	20	PROMAGUARD® ALU	10	86
22	GS-B-DE-2	PROMAGLAF® WB Alu	15	PROMAGUARD® ALU	10					115
23	GS-B-BU-4	PROMAGUARD® ALU	10	PROMAGUARD® ALU	10					108
24	GS-B-BU-5	PROMAGUARD® ALU	10	PROMAGUARD® ALU	10					107
25	GS-B-DE-3	PROMAGUARD® ALU	10	PROMAGUARD® ALU	10					107

etex
inspiring ways of living

List of Promat 29 internal test on GRP Structures

PFL 051220	PV 05.271	GRP mockup with PROMALIGHT O/S 2x10mm	PROMALIGHT®	20-dic-05	**Promaguard**
PFL 060113	PV 06.274	GRP mockup with PROMALIGHT O/S 4x10mm.	PROMALIGHT 200	13-gen-06	**Promaguard**
PFL 060215	PV 06.288	GRP Sandwich with PROMALIGHT-200.	PROMALIGHT 200	15-feb-06	**Promaguard**
PFL 060220	PV 06.290	GRP Laminate covered with Promalight 200 (1x10mm) + Basalt Fibre (2x10mm)	PROMALIGHT 200	20-feb-06	**Promaguard**
PFL 060222	PV 06.292	GRP Sandwich covered with 2 x 10mm Promalight 200 and 2 x 10mm Basalt Fibre	PROMALIGHT 200	22-feb-06	**Promaguard**
PFL 060301	PV 06.296	GRP Laminate covered with Promaguard 3x10mm	PROMALIGHT 200	01-mar-06	**Promaguard**
PFL 060315	PV 06.300	GRP Laminate covered with Promaguard 2x10mm + Basalt Fibre 2 x 10mm	PROMALIGHT 200	15-mar-06	**Promaguard**
PFL 060320	PV 06.302	GRP Sandwich covered with 4 x 10mm Promaguard	PROMALIGHT 200	20-mar-06	**Promaguard**
PFL 060327	PV 06.305	GRP Sandwich covered with 2 x 10mm Promaguard and 40mm Basalt Fibre - mixed layer.	PROMAGUARD	27-mar-06	**Promaguard**
PFL 060925	PV 06.371	GRP Laminate covered with Basalt 10 mm	PROMAGUARD	25-set-06	**Promaguard**
PFL 070605	PV 07.463	GRP mock-up deck with Promaguard	Promaguard	05-giu-07	**Promaguard**
PFL 070612	PV 07.465	GRP mock-up bulkhead with Promaguard	Promaguard	12-giu-07	**Promaguard**
PFL 070621	PV 07.470	GRP mock-up deck II with Promaguard	Promaguard	21-giu-07	**Promaguard**
PFL 070628	PV 07.474	GRP mock-up Hull side with Promaguard	Promaguard	28-giu-07	**Promaguard**
PFL 080218	PV 08.565	Overmarine: PROMAGUARD 10mm on GRP	Promaguard 10mm	18-feb-08	**Promaguard**
PFL 080219	PV 08.566	Overmarine: PROMAGUARD 10mm on GRP (+ acoustic insulation)	Promaguard 10mm	19-feb-08	**Promaguard**
PFL 080221	PV 08.567	Overmarine: PROMAGUARD 10mm on GRP (+ acoustic ins + finishing)	Promaguard 10mm	21-feb-08	**Promaguard**
PFL 080605	PV 08.618	**MCA/Sunseeker: sandwich element - test 1**	Promaguard	05-giu-08	**Promaguard**
PFL 080611	PV 08.622	**MCA/Sunseeker: monotithic resin 6mm - test 3**	Promaguard	10-giu-08	**Promaguard**
PFL 080618	PV 08.625	**MCA/Sunseeker: monotithic resin 12mm - test 2**	Promaguard	18-giu-08	**Promaguard**
PFL 080619b	PV 08.627	**MCA/Sunseeker: Plywood 12mm - test 4**	Promaguard	19-giu-08	**Promaguard**
PFL 080623	PV 08.629	**MCA/Sunseeker: Plywood 25mm - Test 5**	Promaguard	23-giu-08	**Promaguard**
PFL 080625b	PV 08.632	**MCA/Sunseeker: monotithic resin 12mm repetition - test 2**	Promaguard	25-giu-08	**Promaguard**
PFL 080910	PV 08.643	**MCA/Sunseeker: test 7**	Promaguard	10-set-08	**Promaguard**
PFL 080911	PV 08.644	**MCA/Sunseeker: test 6**	Promaguard	11-set-08	**Promaguard**
PFL 080918	PV 08.647	**MCA/Sunseeker: test 8**	Promaguard	19-set-08	**Promaguard**
PFL 080925	PV 08.652	**MCA/Sunseeker: test 9 - Balsa wood**	Promaguard	25-set-08	**Promaguard**
PFL 081022	PV 08.660	**MCA/Sunseeker - test 10**	Promaguard	23-ott-08	**Promaguard**
PFL 081103	PV 08.665	**MCA/Sunseeker - test 11**	Promaguard	03-nov-08	**Promaguard**

etex
inspiring ways of living

1st phase: detection of main parameters to be tested

Core Glass Reinforced Plastic (GRP) Constructions

Internal skin HDT 60°C ~~90°C~~ 110°C

ORTHOPHTHALIC - ISOPHTHALIC - VYNILESTER

Internal skin minimum market requirement: 1 mm

Thickness core: ~~25mm~~ 50mm

Less core density: 60 kg/m^3

Class fire requested: A or B x 2 Deck and Bulkhead

etex
inspiring ways of living

FRP and Passive Fire Protection

Nowadays there are no rules on how to conduct a fire test on FRP ship structures.

In the absence of a dedicated rule, official Fire labs performs tests according to SOLAS FTP Code on small furnace (average size 1,2 x 1,2 m).

The certificate issued is a Type Approval.

Description of Fire Test Procedure and Criteria

The criteria for fire tests on FRP constructions are:

- INSULATION : no average rise above ambient temperature more than 140°C average of 5 thermocouples
- no rise above ambient more than 180°C at any individual point for all the duration of test.
- INTEGRITY : absolute average temperature on five thermocouple on fireside skin to stay below HDT (ISO 75)

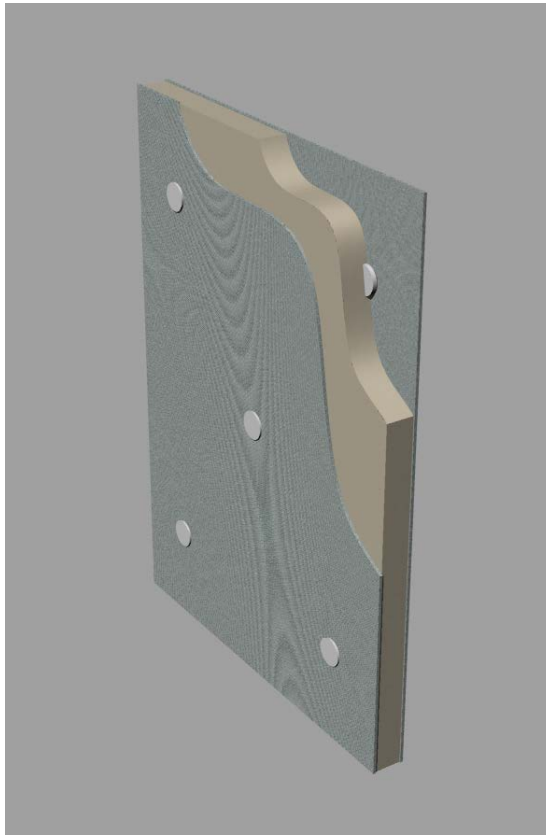

Example : A60 Deck fire test curves

Insulation Δ ≤ 140°C

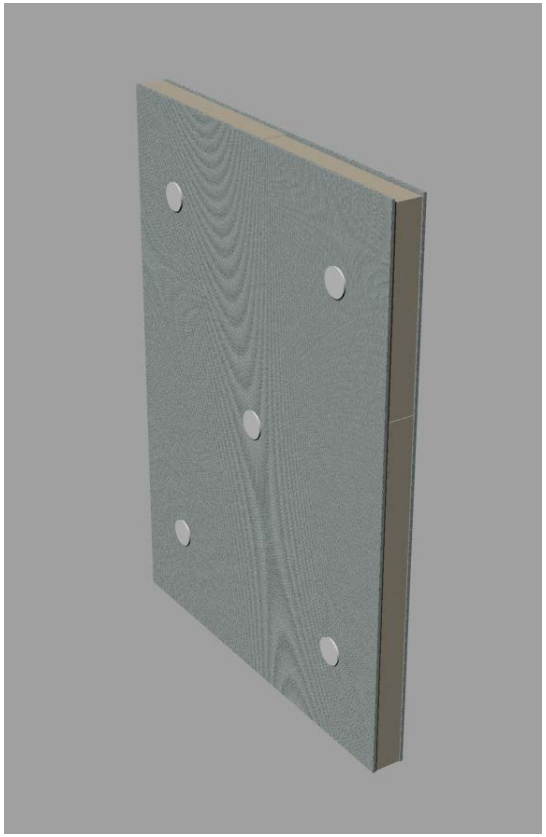

RINA

RAPPORTO DI PROVA N. 2007CS013120-1
TEST REPORT No.

Pagina 12 di 18
Page 12 of 18

Figura E
Figure E

Incremento di temperatura media rilevata sulla faccia non esposta del campione
Mean temperature rise recorded on the unexposed face of the specimen

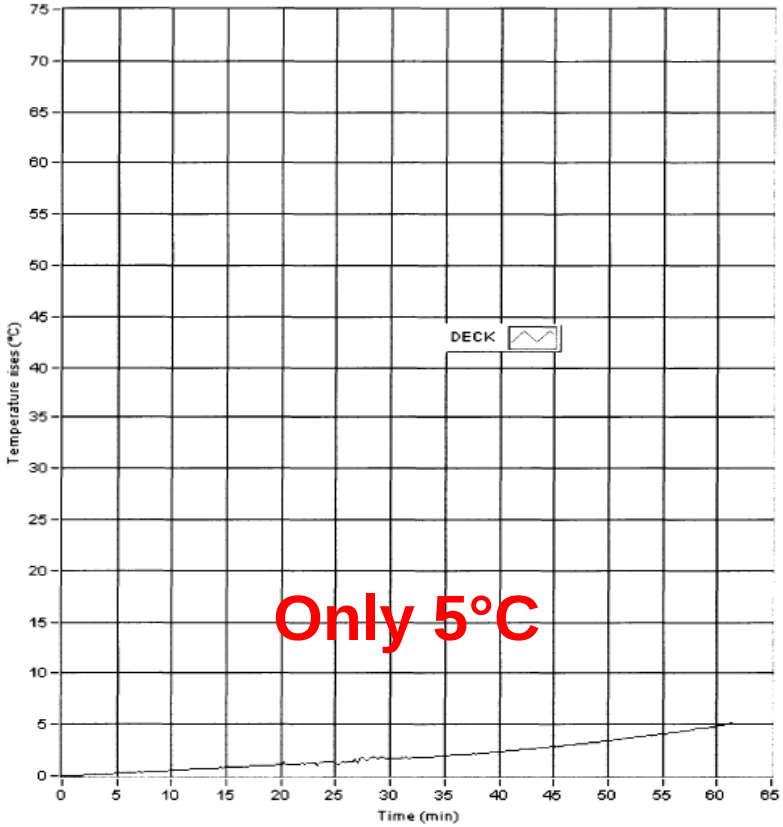

Il presente RAPPORTO DI PROVA non può essere riprodotto parzialmente, salvo approvazione scritta del RINA.
The following TEST REPORT is not to be partially reproduced without the written permission of RINA.

Form LABSTDFIRE1 - 05/04

Example : A60 Deck fire test curves

Integrity ≤ HDT

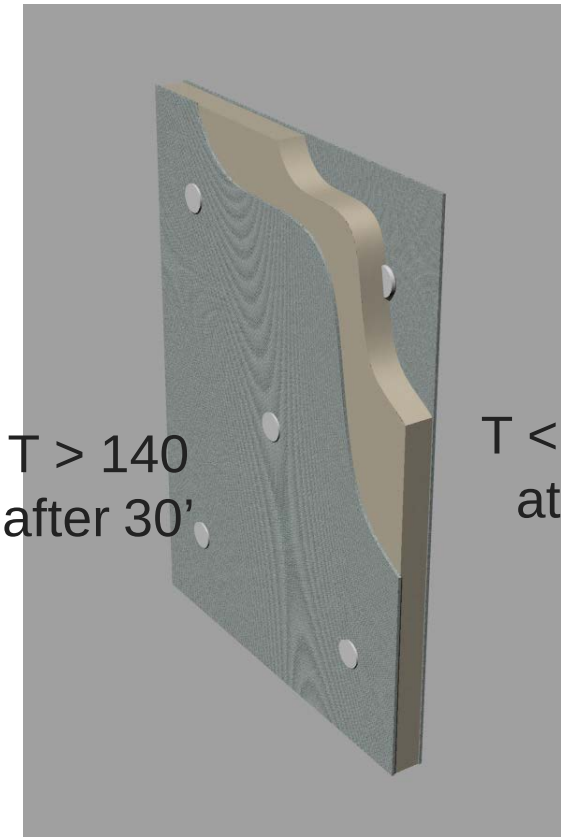

T > 140
after 30’

T < HDT
at 60’

For FRP we have to
talk only of A or B class

RINA

RAPPORTO DI PROVA N. 2007CS013120-1
TEST REPORT No.

Pagina 14 di 18
Page 14 of 18

Figura G
Figure G

Temperatura media della pelle in vetroresina sulla faccia adiacente alla coibentazione
Mean temperature of GRP skin on the interface with the insulation material

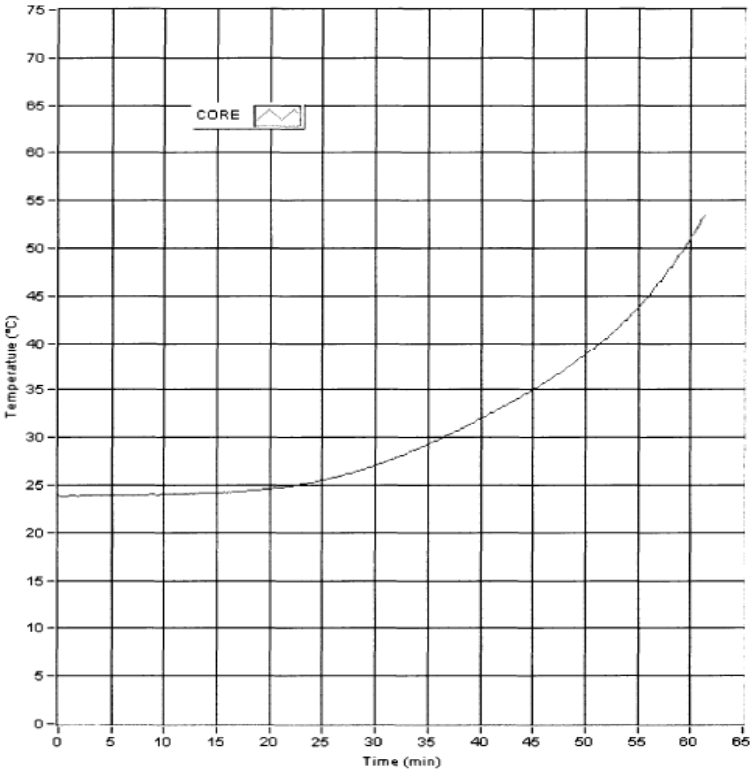

Il presente RAPPORTO DI PROVA non può essere riprodotto parzialmente, salvo approvazione scritta del RINA.
The following TEST REPORT is not to be partially reproduced without the written permission of RINA.

Form LABSTDFIRE1 - 05/04

2nd phase: B class test

Test done at RINA laboratory

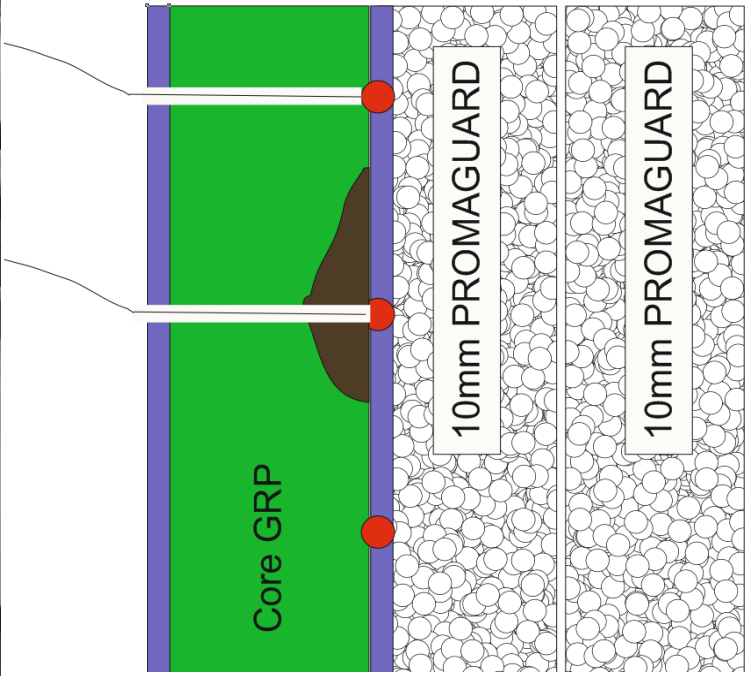

Quality PVC Core is a parameter that have to be monitored

etex
inspiring ways of living

2nd phase: B class test

Test done at RINA laboratory

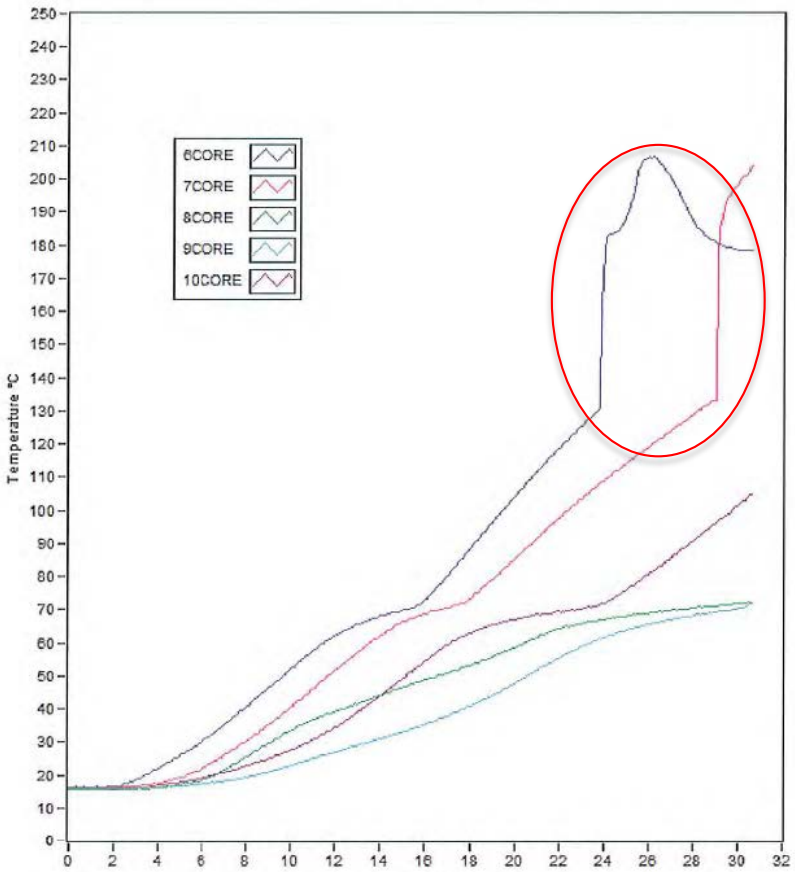

Quality PVC Core is a parameter that have to be monitored

etex
inspiring ways of living

2nd phase: B class test

Test done at RINA laboratory

Perfect material insulation almost intact

Hot gases from PVC core could explain the non linear collapse of internal skin

etex
inspiring ways of living

Project phases: where we are?

Find trends for MNG 407 parameters among our fire test

Done; Possible introduction of HDT for PVC core

Built a fire test that will meet worst parameters to validate the hypothesis

Partially done – B class completed – A class to be done possibly in 2017

Collaboration with notified bodies for emission of a new coordinated MGN for GRP

To be done

Success full story: Complete GRP door

PROJECT for a FRD Type Approval certificate

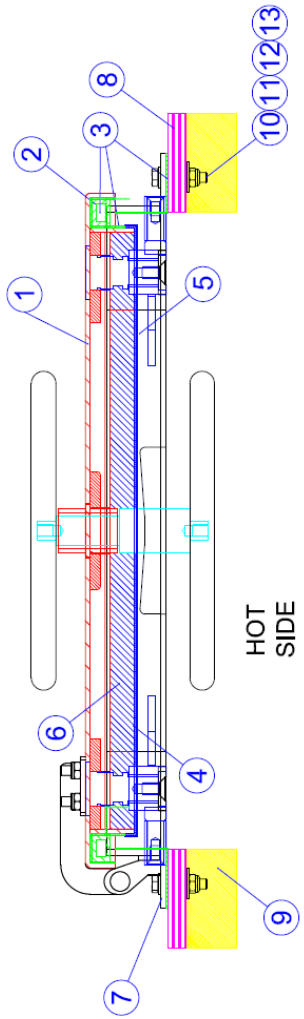

BCSERVICE
Bianchi & Cecchi Service, Inc - Since 1942.
www.bcserviceinc.com

13	Lock nut M10 A4		
12	Flat washer D11x30 A4		
11	Flat washer D11x21 A4		
10	TE M10x50 A4		
9	LANA DI ROCCIA SP. 50 Densità 100 kg/m ^{3}		
8	PANNELLO VTR SP.20		
7	TELAIO INOX 316 SP. 5		
6	PANNELLO PROMAGUARD SP.10+15 Densità 240 kg/m ^{3}	PROMAT	
5	PROMASEAL L sp.1.8 mm incollato con Spabond 345 - Gurlt	PROMAT	
4	COVER INTERNA sp.2.5 mm		
3	TERMOESPAN. PROMASEAL LSK 15x1.8 Densità 1000 kg/m	PROMAT	
2	GUARNIZIONE SILICONICA CAVA 30x20		
1	ANTA ESTERNA SP.5 CON RESINA POLIESTERE AUTOESTINGUENTE		
POS.	DESCRIZIONE	FORNITORE	

etex
inspiring ways of living

PROJECT for a GRP A60 door

Door construction

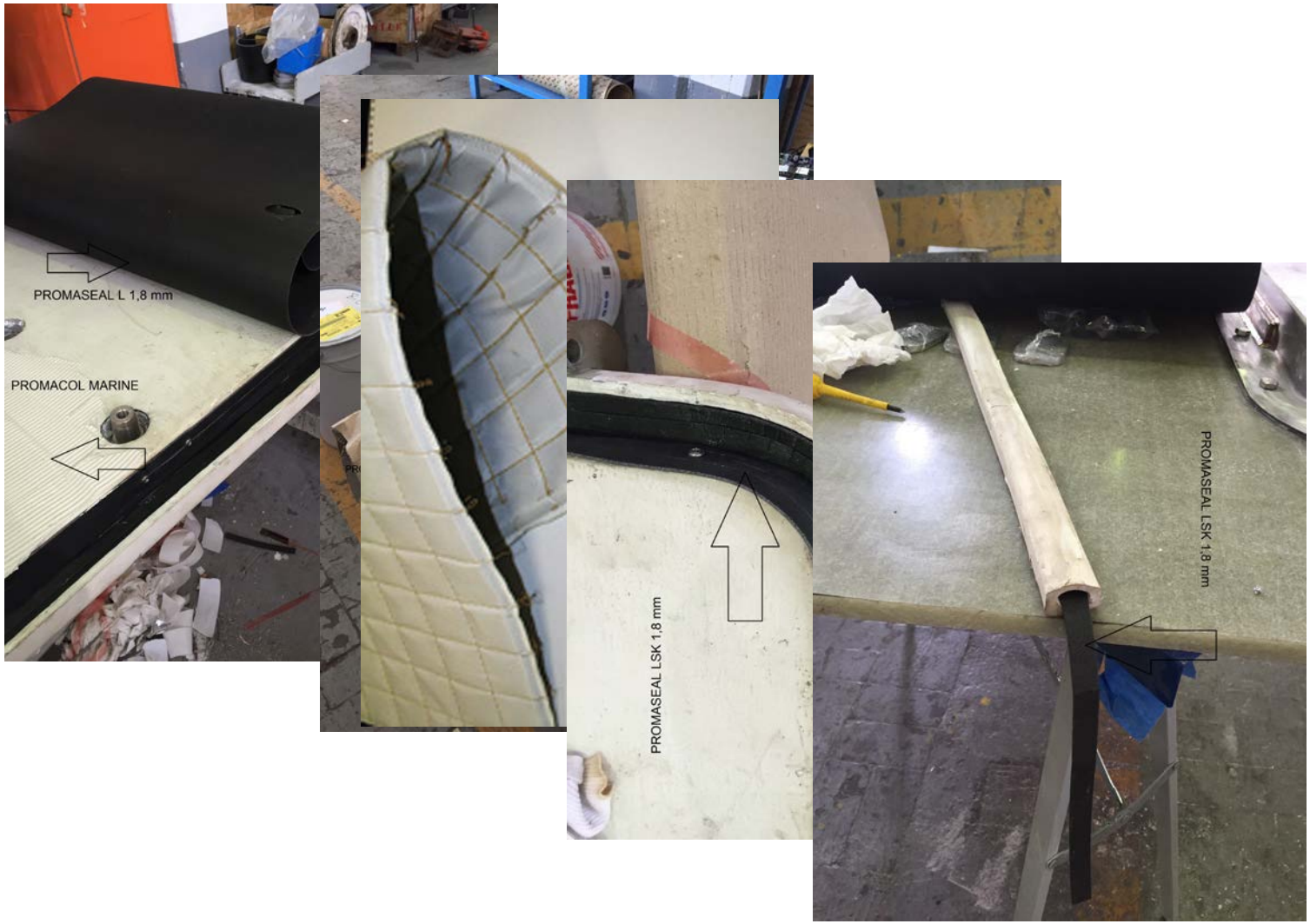

PROJECT for a GRP A60 door

Core Glass Reinforced Plastic (GRP) Constructions

Fire test start

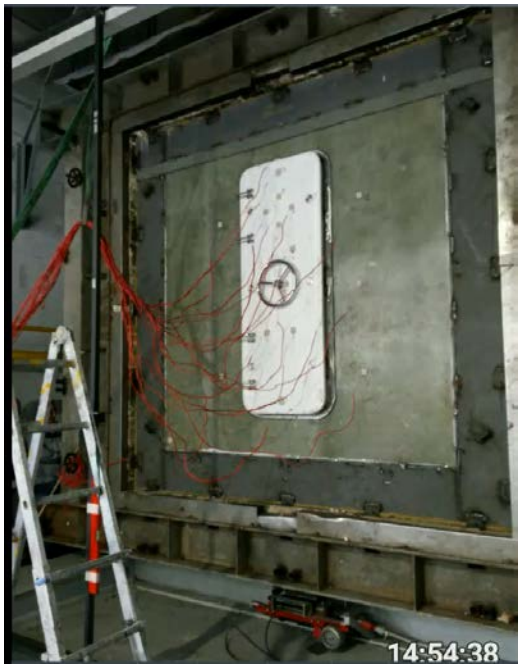

Fire test stop

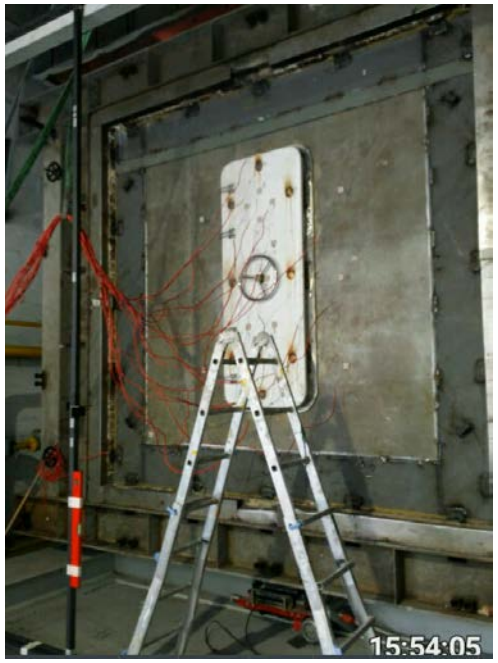

Internal door after test

etex
inspiring ways of living

PROJECT for a GRP A60 door

After 60 minutes max rise non fire side was 57°C with an average of 49°C

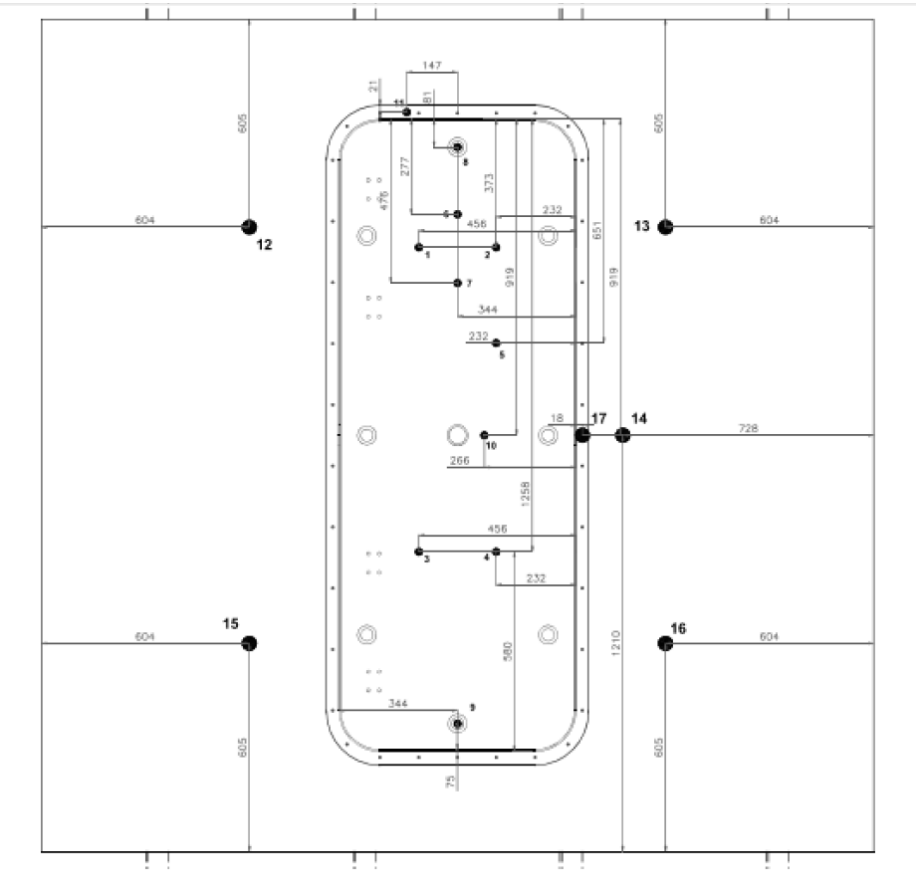

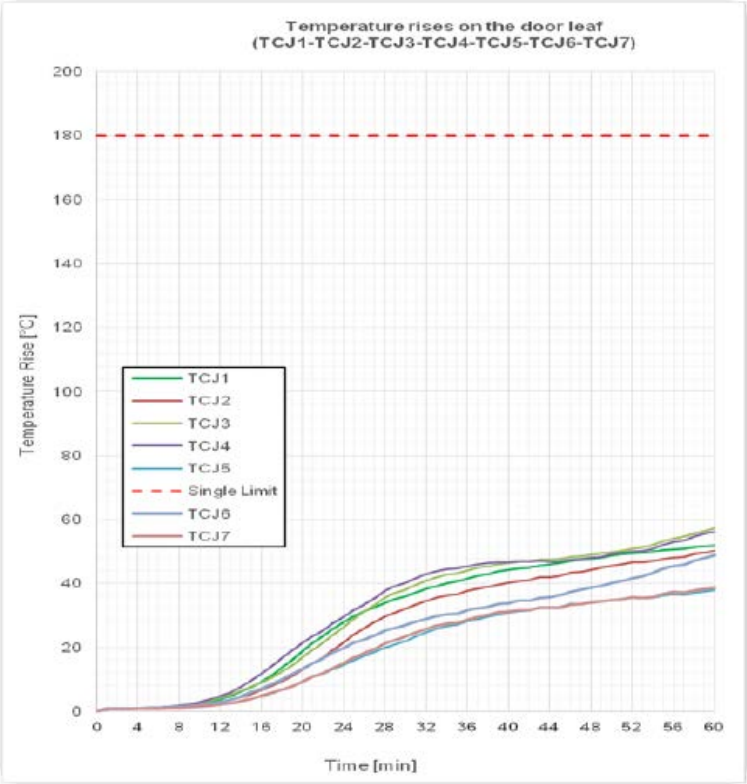

DOOR LEAF: SINGLE TEMPERATURE RISES ON THE SURFACE SAMPLE (from TCJ1 toTCJ7)

Request to Lloyds an IMO A60 certification

etex
inspiring ways of living

Thanks for attention

etex
inspiring ways of living